Fxx31 Series
Slide Potentiometer

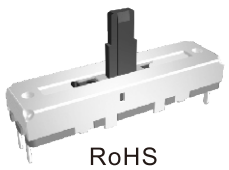

RoHS
COMPLIANCE

Feature

1.Metal housing. 2.Center detent option.

3.Plastic slide rod type. 4.Long Life Type Available.

Fxx31 Series Slide Potentiometer

Electrical characteristics

- Total Resistance.....1KΩ~1MΩ
- Total Resistance Tolerance.....500Ω<R<1MΩ: ±20%
  R≤500Ω or R≥1MΩ: ±30%
- Resistance Taper.....A,B,C
- Withstand Voltage.....1 minute at AC 300V
- Insulated Resistance.....More than 10MΩ at DC 250V
- Sliding Noise.....Less than 100mV
- Residual Resistance..... 20mm :
  Term.1~2(2'~3') : Less than 10Ω
  Term.2~3(1'~2') : Less than 20Ω
  30mm :
  Term.1~2(2'~3') : Less than 10Ω
  Term.2~3(1'~2') : Less than 30Ω
- Gang Error (Dual Units).....- 40dB~0dB±3dB
- Rated Voltage .....Taper B:
  20mm,30mm,45mm,60mm:AC 200V
  Other Tapers :
  20mm,30mm,45mm,60mm:AC 150
- Rated Power(Single Unit/Dual Units)
  Linear Taper B..... 20mm:0.1W/0. 05W,
  30mm:0.2W/0.1W,45mm:0.25W/0.125W,
  60mm:0.2W/0.2W
  Other Tapers..... 20mm:0.05W/0.025W
  30mm:0.1W/0.05W,45mm:0.125W/0.06W,
  60mm:0.1W/0.1W

Mechanical characteristics

- Detent Torque (Only Center Click) .....30gf~120gf
- Slide Torque..... 10gf~100gf
- Stopper Strength.....5.0Kgf.cm Min(from the base level to a point of 2mm)
- Center Detent Force.....50~200 gf
- Level Wobble..... .....2(2×L)/20mm Max
  (L:Level Length both sides)
- Level Push-Pull Strength.....3.0Kgf Min. at 10Sec.

Durability

- Sliding Life.....Standard life: 15,000 Cycles Min.
  Long life: 100,000 Cycles Min.
- Operating Temperature Range.....-10°C ~ +70°C

Fxx31 Series
Slide Potentiometer

HOW TO ORDER

Fxx31-	N	N	0	S	C	1	C	100K	1

Model Series	
xx	Slide Travel (See Note 2)
20	20mm
30	30mm
45	45mm

Code	Gang Option
N	Single Unit
G	Dual Gangs

Code	Frame Option
N	Without Frame
F	With Frame

Code	Detent
0	No Detent
1	Center Detent

Slide Lever Type & Length
See Note 1

Code	Resistance Taper
A	Audio (15A)
B	Linear(Single Unit:1B; Dual Gangs:3B)
C	Reverse Audio(15C)
D	Audio (10A)

Code	Dustproof Option
S	No Dustproof Cover
D	with Plastic Dustproof
R	with Nonwoven Dustproof

Total Resistance
1K
2K
5K
10K
20K
50K
100K
200K
500K
1MEG

Code	Operation Life
(Blank)	Std. Life w/o anti-sulfur
1	Std. Life w/ anti-sulfur
2	Long Life w/ anti-sulfur
3	Long Life w/o anti-sulfur

Note 1: Slide Lever Type and Length:

A-TYPE

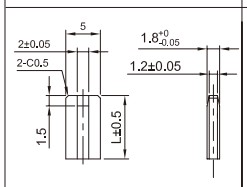

L	5	8	10
CODE	1	2	3

B-TYPE

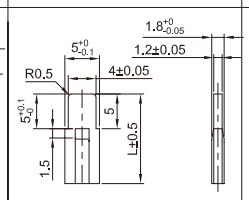

L	9.7	12.5
CODE	1	2

C-TYPE

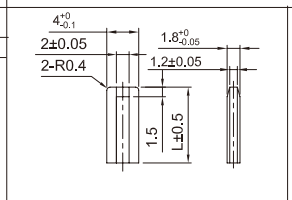

L	5
CODE	1

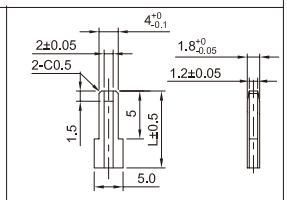

L	10	15	20	
CODE	2	3	4	

Note 2: Dimension

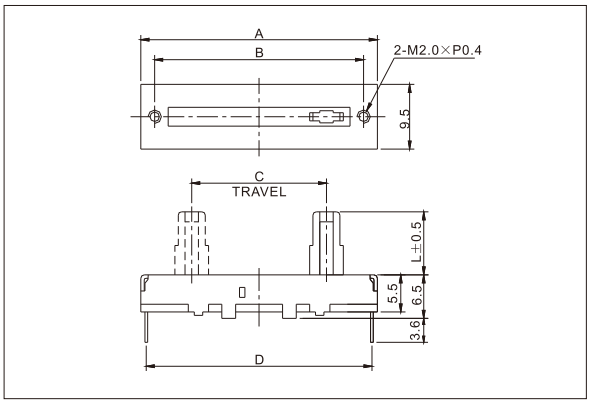

MODEL	A	B	C	D
F2031-NN	35	31	20	33.8
F3031-NN	45	41	30	43.8
F4531-NN	60	56	45	59

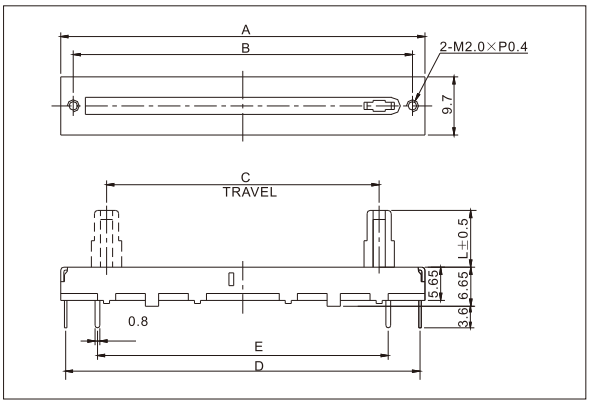

MODEL	A	B	C	D	E
F2031-GN	35	31	20	33.8	23
F3031-GN	45	41	30	43.8	33
F4531-GN	60	56	45	59	48

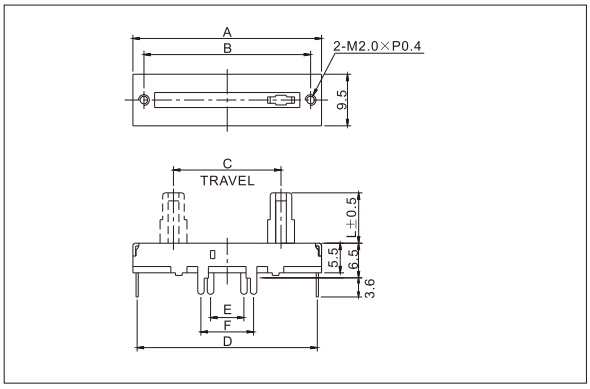

MODEL	A	B	C	D	E	F
F2031-NF	35	31	20	33.8	6.2	9.8
F3031-NF	45	41	30	43.8	16.2	19.8

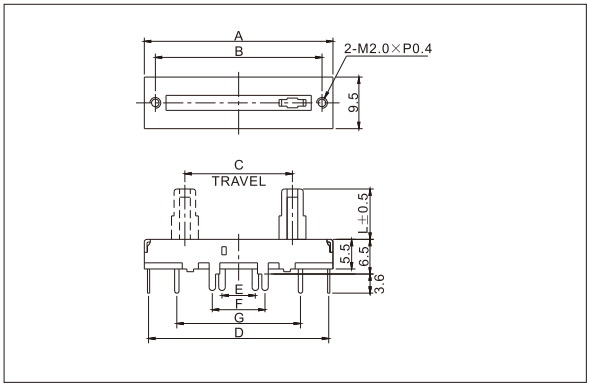

MODEL	A	B	C	D	E	F	G
F2031-GF	35	31	20	33.8	6.2	9.8	23
F3031-GF	45	41	30	43.8	16.2	19.8	33

Fxx31 Series
Slide Potentiometer

F2031-GN
20mm Travel, Standard Type, 2 Gangs, Center Detent Available, without Frame

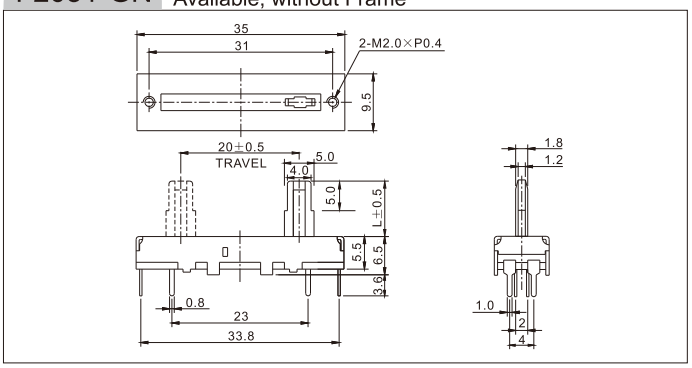

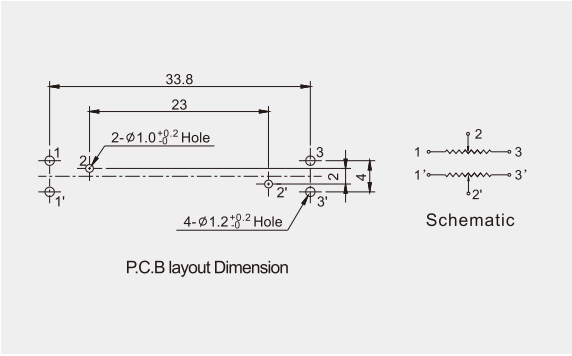

F2031-GF
20mm Travel, Standard Type, 2 Gangs, Center Detent Available, with Frame

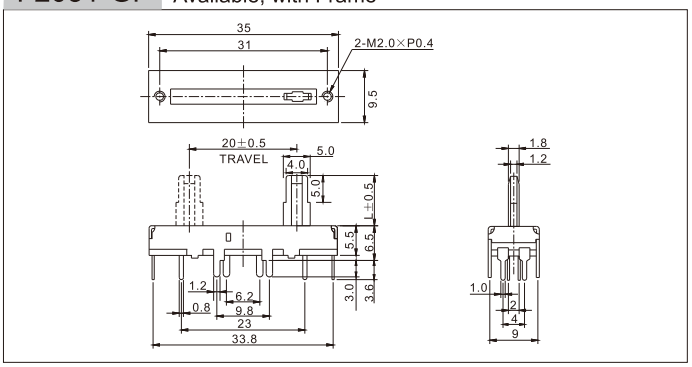

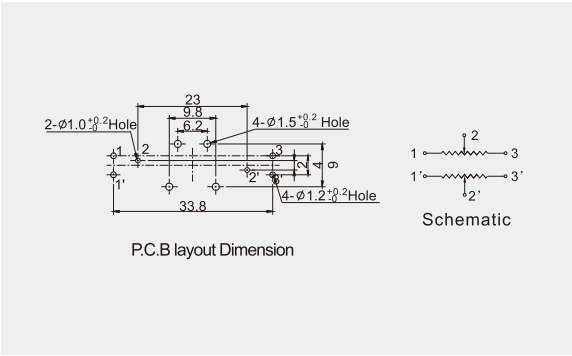

F2031-NN
20mm Travel, Standard Type, 1 Gang, Center Detent Available, without Frame

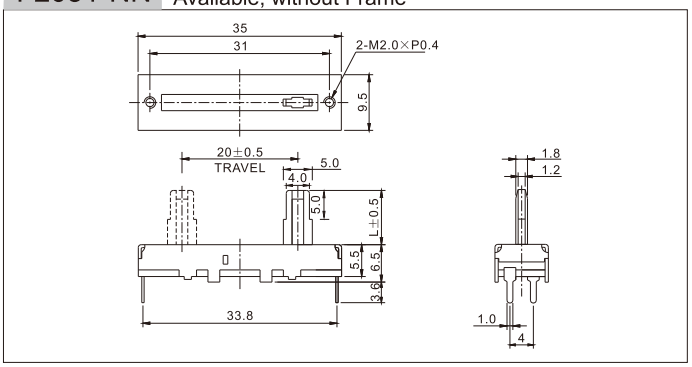

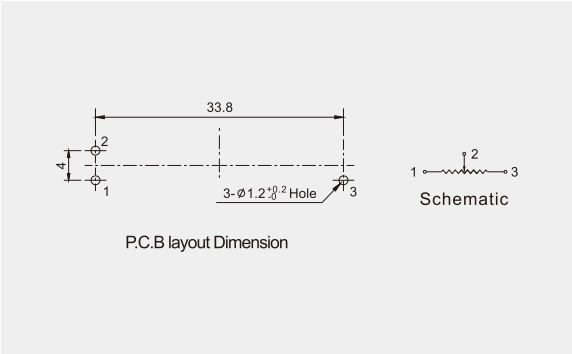
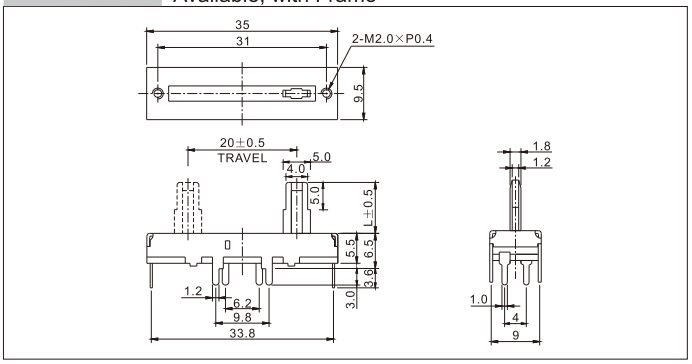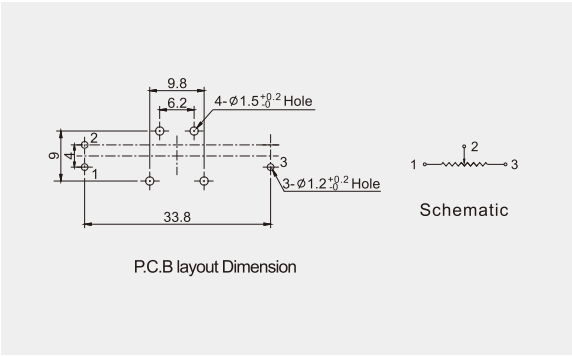
F2031-NF
20mm Travel, Standard Type, 1 Gang, Center Detent Available, with Frame