FSE16 Series Rotary Position Sensor

Feature

1. Dust proof construction protects the interior from dust,which maintatins stable characteristice.
2. FR-4 element materials compliant to flow high peak temperature lead free soldering.
3. Long life,over 500,000 cycles.

Application:

- Auto Damper Controller

Recommended model:

- FSE16-01GB4K7r0

Electrical Characteristics

Resistance Range	4.7KΩ
Total Resistance Tolerance	±20%
Taper Style	B taper
Power Rated	0.25W
Linearity	±1.3%
Output(Reference Point)	0% at-170° 100% at 170°
Rated Voltage	DC5V±0.5V

Environmental Characteristics

Rotation Life	500,000 Cycles
High Temperature	±85°C±2°C,240h,non-load
Humidity	+60°C±2°C,90%RH, 240h,non-load
Heat Shock	-40°C±3°C,1h, +85°C±2°C,1h 100cycles, non-load

Mechanical Characteristics

Operating Angle	360° (endless)
Rotational Torque	15mN.m max.
Axial Play	0.1 mm max.
Shaft Push-Pull Strength	10N. min. for 3 sec. min

HOW TO ORDER

FSE16-	01	G	B	4K7	r0
Model Series	Terminal Style	Rotor Style	Resistance Taper	Total Resistance	Electrical Angle Code
	01: Standard	G: Hollow shaft	B: Linear(0B)	4K7	Q0:190° P0:180° M0:150° W0:250° J0:120° r0:340°
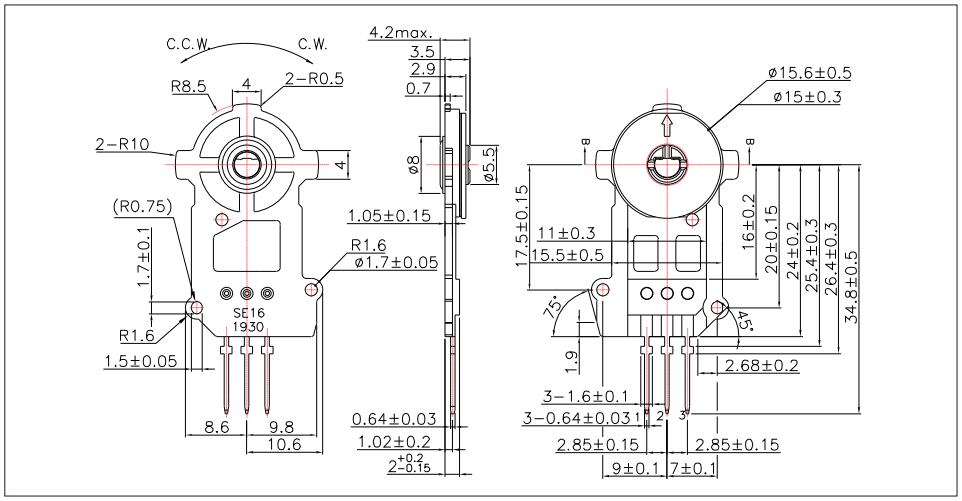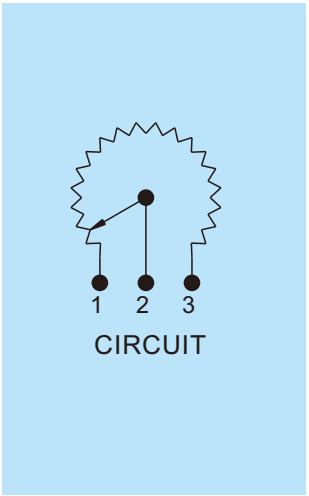
FSE16